SALAMANDER BROILER

36” INFRARED SALAMANDER BROILER
(RANGE MOUNT or WALL MOUNT)
ATSB-36

Standard Features

- Stainless steel exterior and interior
- Dual valve controls for left and right-side independent operation
- Two(2) 21,500 BTU high efficiency ceramic infrared burners and standby pilots – totals 43,000 BTU’s
- 1 minute pre-heat time
- 4 position rack adjustments on salamander broiler
- One(1) removable broiler chrome rack
- Removable crumb/grease tray
- Range mount kit ships with salamander broiler

标准配置

- 不锈钢内外结构
- 双阀门控制，可独立调节左侧和右侧
- 2个21,500BTU高效陶瓷红外线灶和待用火种头: 共43,000BTU
- 1分钟预热
- 可调节架有4个档位
- 可拆卸渣滓/油污盘
- 含安装套装

Optional Accessories

- Wall mount brackets

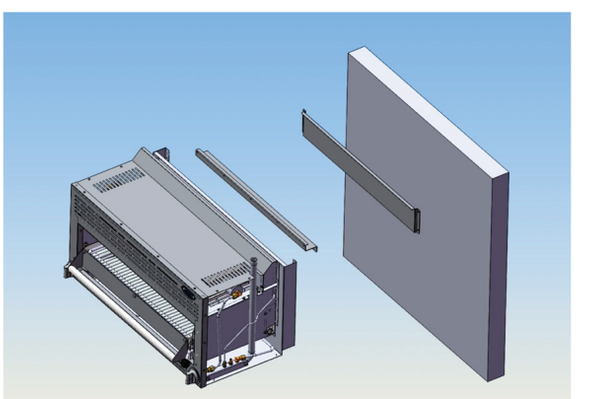

型号	炉灶和控制	燃气种类	进气管压力	BTU	总BTU	调节	外部尺寸	净重	总重

Models	Burners and Control Method	Gas Type	Intake-Tube Pressusre (in.W.C.)	Per BTU B.T.U./h	Total BTU B.T.U./h	Regulator	Exterior Dimensions (inch)	Net Weight (lbs)	Gross Weight (lbs)
ATSB-36	2 Burners	NG	5	21,500	43,000	5"w.c.	36×18×17 1/3	143	169
	Independent Manual Control	LP	10	21,500	43,000	10"w.c.			

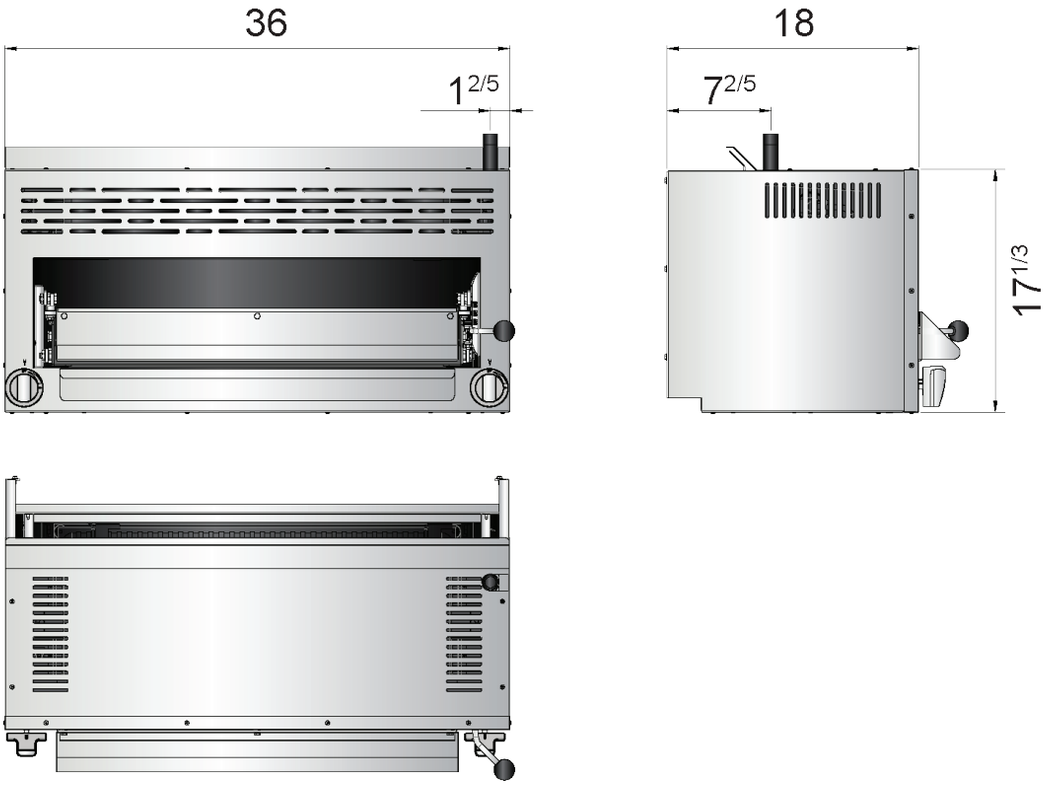

Stainless steel exterior

Crumb/grease tray

Stainless steel knobs

Broiler chrome rack

4 position controller