CB 425

Ice Cube

Self-contained ice maker - Sprayer system
Daily production up to 49 kg

Hotel	■
Restaurant	■
Fast food	■
Bar	■
Disco	■
Fish market	
Supermarket	
Medical & SPA	
Industry	■

▶ Position n°

▶ Features & Plus

- Compact and crystal cube
- AISI 304 SS Scotch Brite finish
- Tropical class +43°C
- Adjustable Stainless Steel feet
- Removable and cleanable air filter
- Air or water cooling system
- Easy cleanable internal rounded surfaces
- HCFC-Free insulated storage
- RoHS Free
- Disappearing insulated door
- Electromechanical operation
- ON-OFF rocker switch
- Standard and special voltages

AISI 304 SS Scotch Brite finish

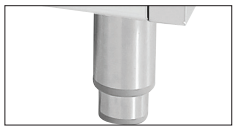

Adjustable Stainless Steel feet

Removable and cleanable air filter

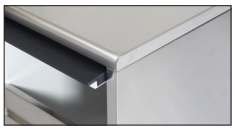

Disappearing insulated door

▶ Available ice cube size

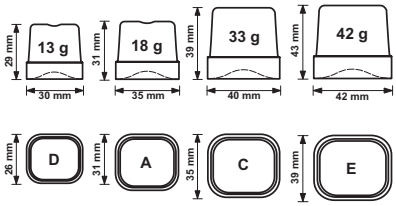

▶ Prod. 24h

Air temp.		Water temp.		kg	lbs
10° C	50° F	7° C	45° F	49	108
21° C	70° F	15° C	60° F	47	104

2 Years Warranty
subject to limitations

▶ Certifications available for this model

Ice Cube

CB 425

BREMA Ice Makers

Self-contained ice maker - Sprayer system
Daily production up to 49 kg

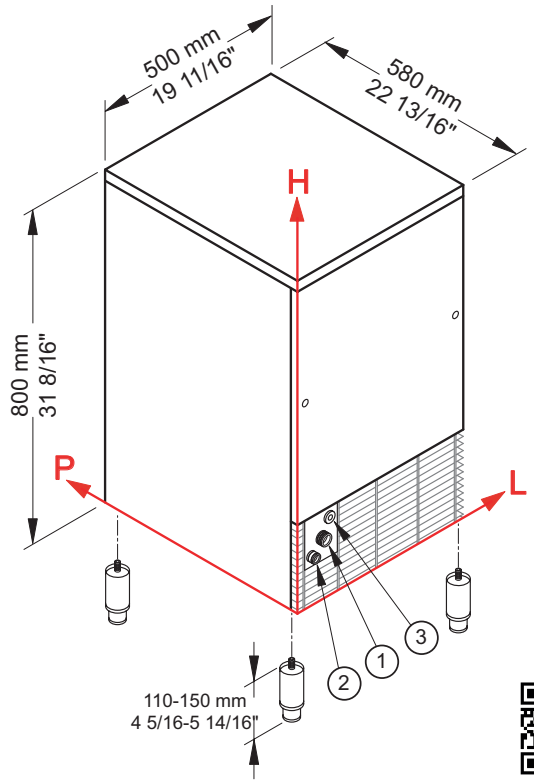

Installation

▶ Working conditions

- Location: **Indoor**

	Min	Max
Ambient temperature	+10° C / +50° F	+43° C / 110° F
Water temperature	+3° C / +37° F	+32° C / +90° F
Voltage	-10%	+10%
Water inlet pressure	1bar (14 psi)	6bar (84 psi)

▶ Performances

		Water temperature					
		7° C	45° F	15° C	60° F	21° C	70° F
Air temperature	10° C	49 kg					
	50° F		108 lbs				
	21° C			47 kg			
	70° F				104 lbs		
	32° C					40 kg	
	90° F						88 lbs

▶ Connections

All measures are referred to the rear bottom-left corner (L-H-Ø)

① Water in.: 111 mm / 4 6/16" - 196 mm / 7 11/16" - 3/4"
② Water out.: 49 mm / 1 15/16" - 151 mm / 5 15/16" - 24 mm / 15/16"
③ Electrical connections: 156 mm / 6 2/16" - 232 mm / 9 2/16"

▶ Technical information

Production in 24h	47 kg / 104 lbs
Store capacity, up to	25 kg / 55 lbs
Cooling system	A - W
Kind of cube	A-18g, C-33g, D-13g, E-42g
Refrigerant	R404A - R452A
Standard voltage	220-240 V ~ 50 Hz
Average power consumption	500 W
Fuse	10 A
Finish	AISI 304 stainless steel, scotch brite

Water consumption	A: 4 l/kg - 47,9 gal/100 lbs
	W: 14 l/kg - 167,8 gal/100 lbs
Sizes (L-P-H mm)	500 - 580 - 800
(L-P-H in)	19 11/16 - 22 13/16 - 31 8/16
Sizes with pack (L-P-H mm)	550 - 630 - 990
(L-P-H in)	21 10/16 - 24 13/16 - 39
Net weight	56 kg / 123 lbs
Gross weight	64 kg / 141 lbs

All the technical information need to be considered at the following conditions:
Standard Cube (18 g)
Ambient temperature +21° C
Water temperature +15° C
Average power consumption at +43° C (standard voltage)

Models and specifications are subject to change without notice

Rev. 04 - Issued September 2019