WORK TABLE
DSST-2436-BKSS

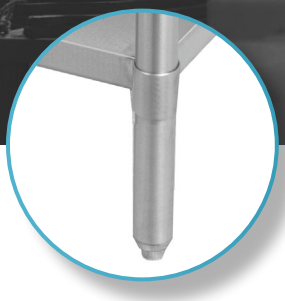

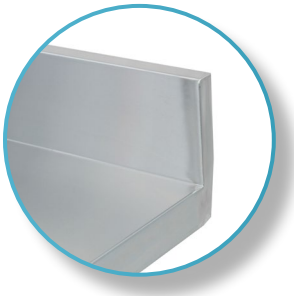

FEATURES

- Made with high quality 430 stainless steel
- Dimensions: 36" x 24" x 34"
- Easy to assemble
- Gauge 18
- Economic shipping weight
- 5" backsplash

OPTIONAL ACCESSORIES

- Extra stainless steel undershelf
- Adjustable stainless steel leg insert
- Set of swivel casters
- Brace bar kit

Distributed by:
DISTEX
THORINOX

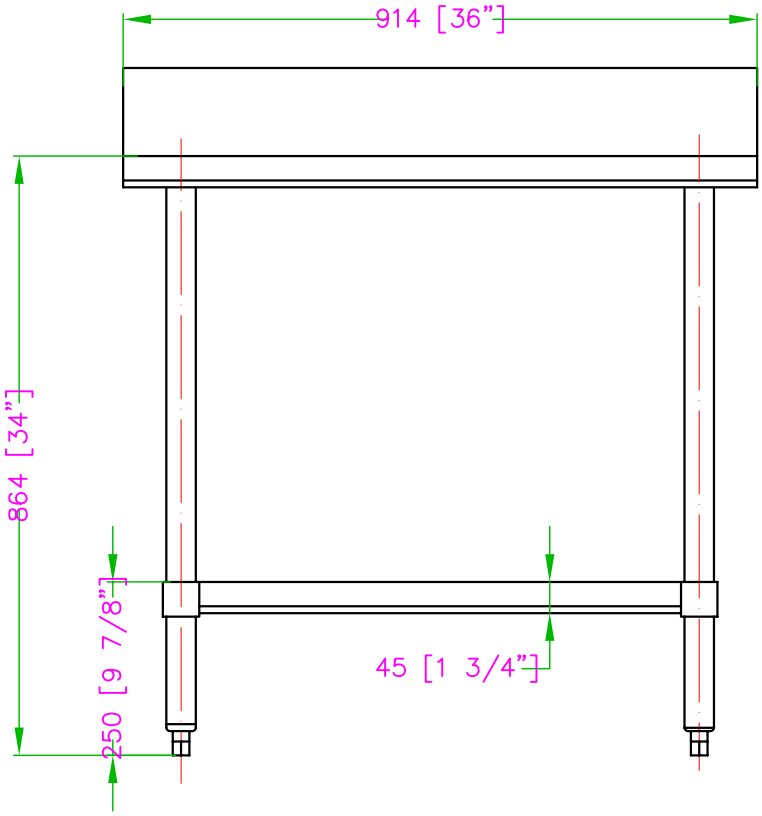
914 [36”]
864 [34”]
250 [9 7/8”]
45 [1 3/4”]

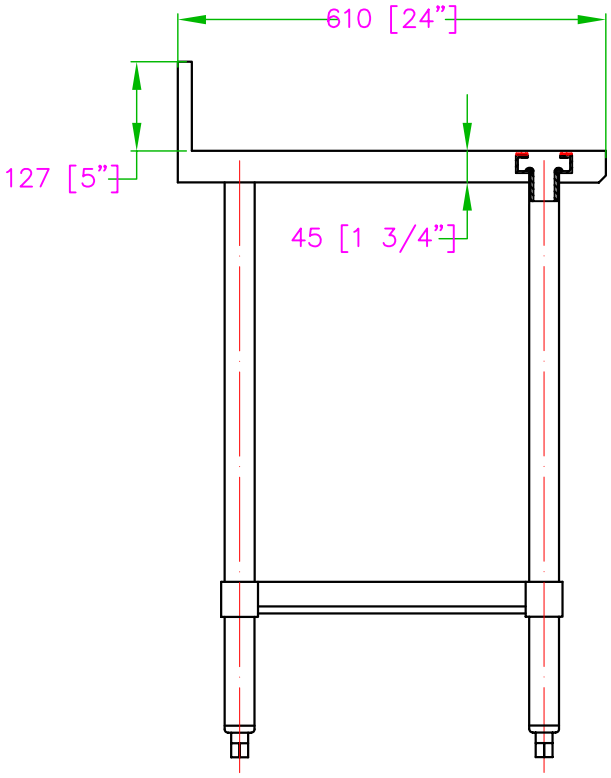
610 [24”]
127 [5”]
45 [1 3/4”]

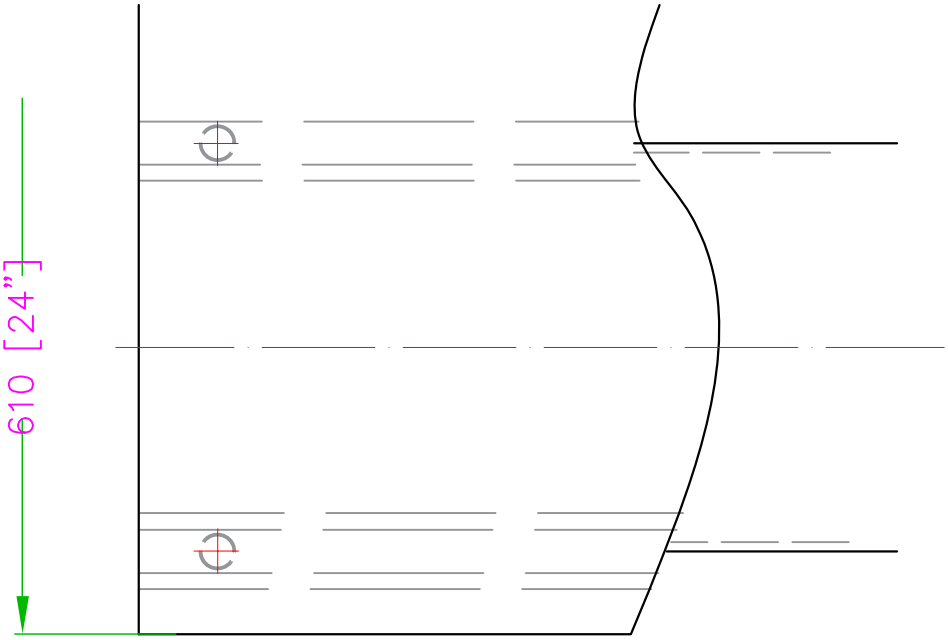
610 [24”]