WORK TABLE
DSST-3018-GS

FEATURES

- Made with high quality 430 stainless steel
- Dimensions: 18" x 30" x 34"
- Easy to assemble
- Gauge 18
- Economic shipping weight

OPTIONAL ACCESSORIES

- Extra stainless steel undershelf
- Adjustable stainless steel leg insert
- Set of swivel casters
- Brace bar kit

Distributed by:
DISTEX
MIAMI
THORINOX

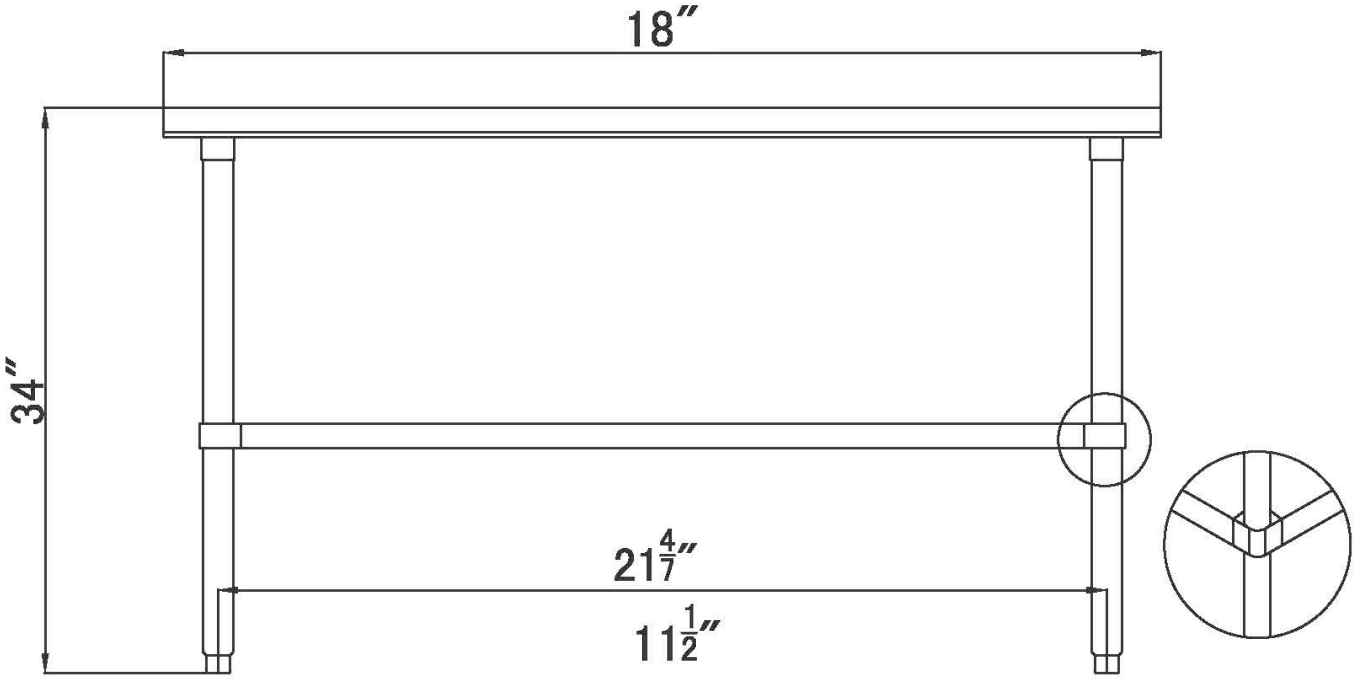
18″
34″
21 4/7″
11 1/2″

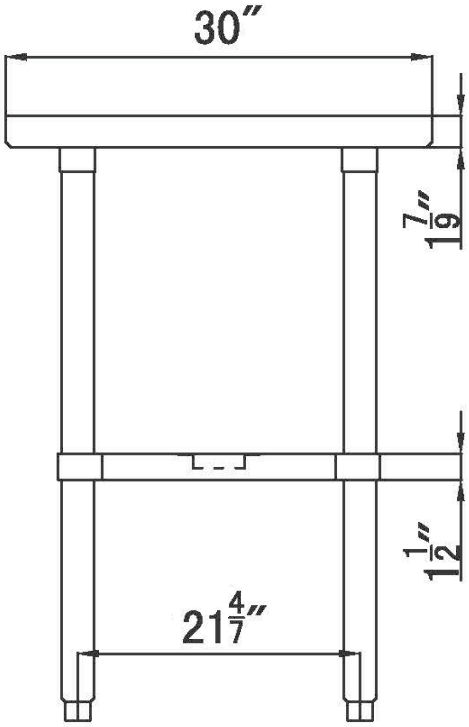
30″
1 7/9″
1 1/2″
21 4/7″